Proposed Project Location in Vermilion Parish

Proposed Ring Earthen Berm/Concrete Floodwall at the Vermilion Parish Detention Center

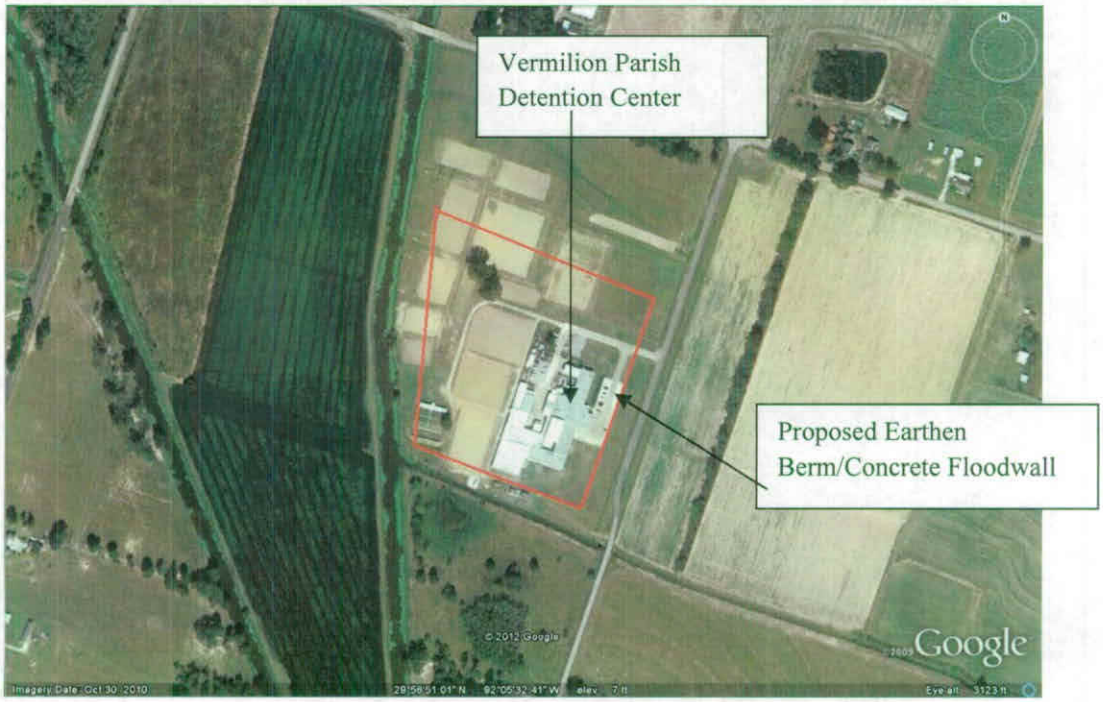

Wetland Map for the Proposed Project

Plan View of the Proposed Project

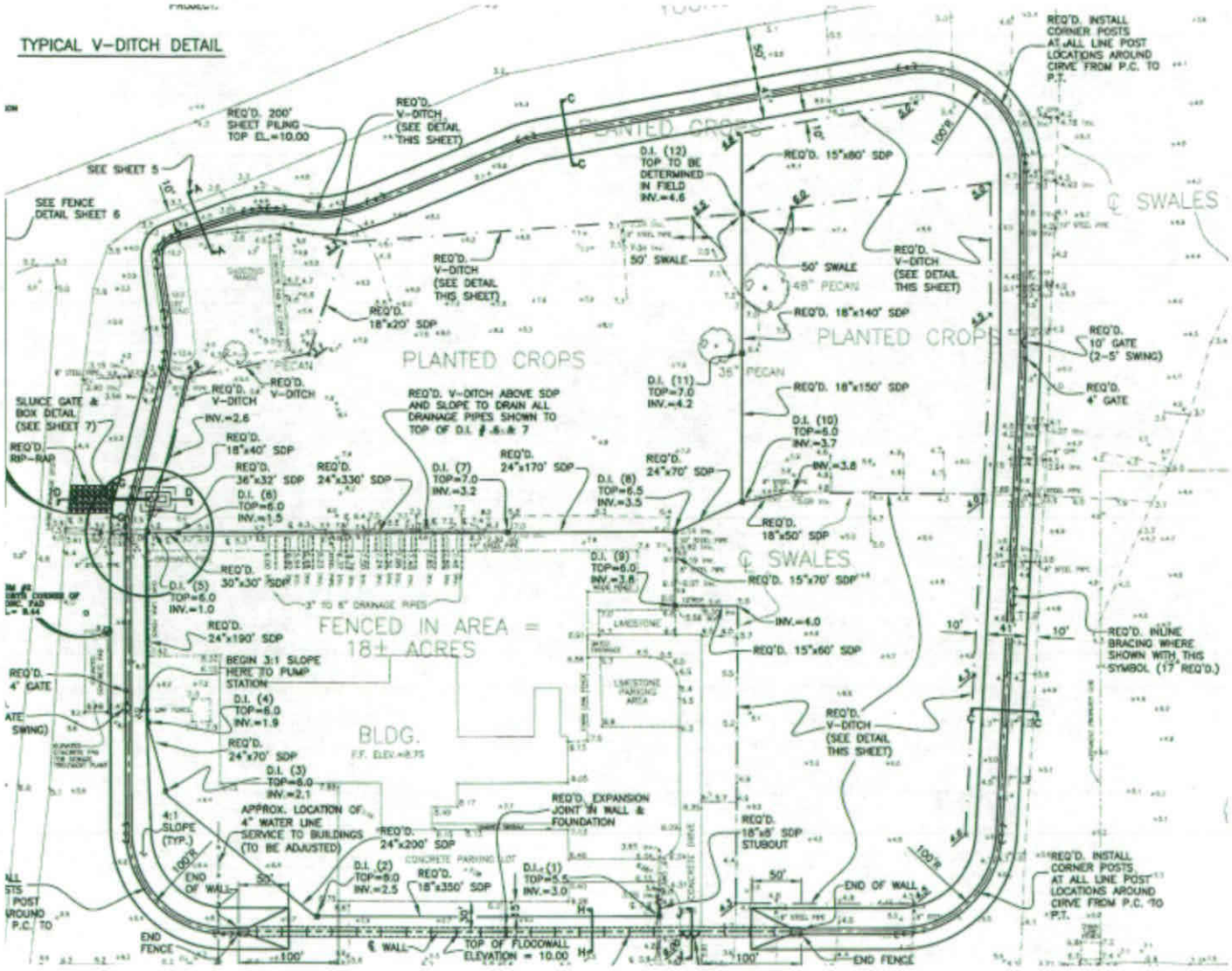

Plan View of the Drainage Outfall at Existing Shooting Range

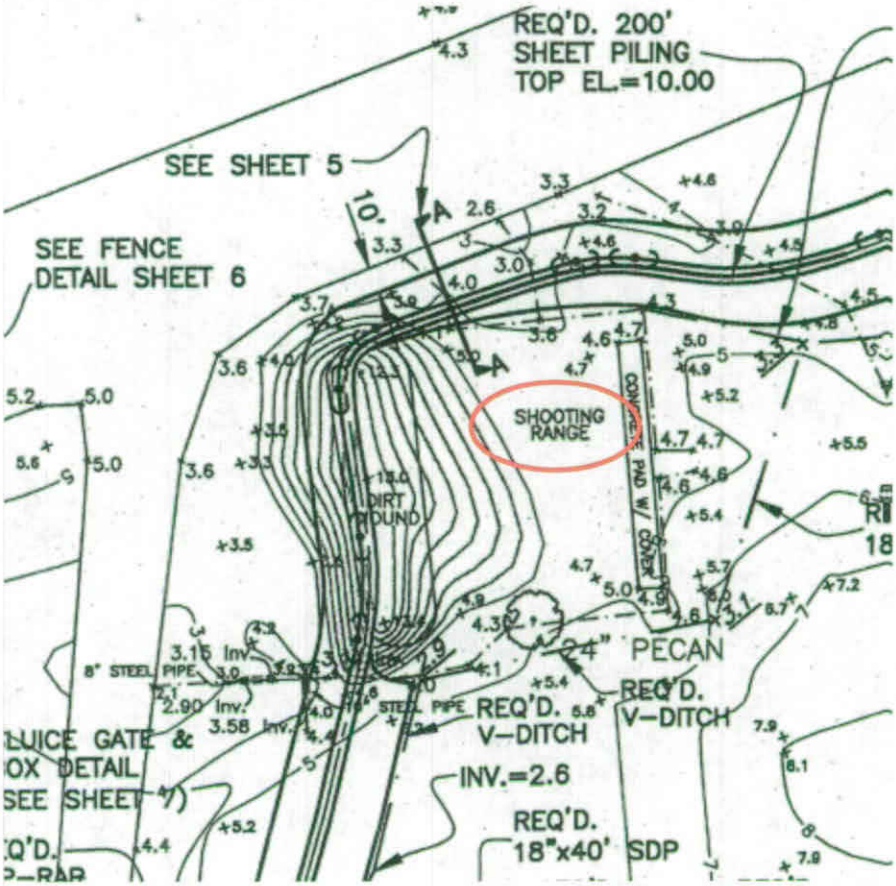
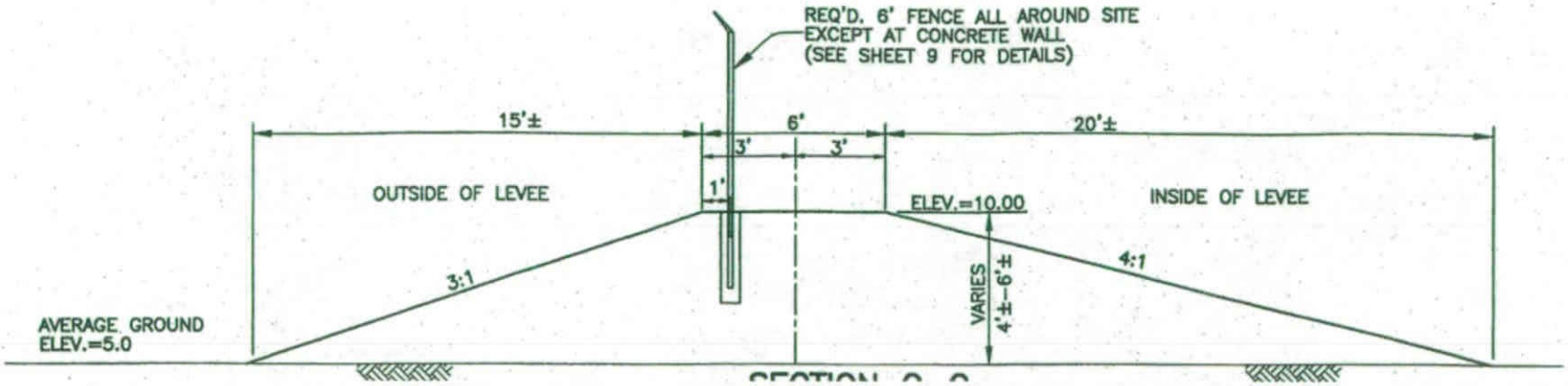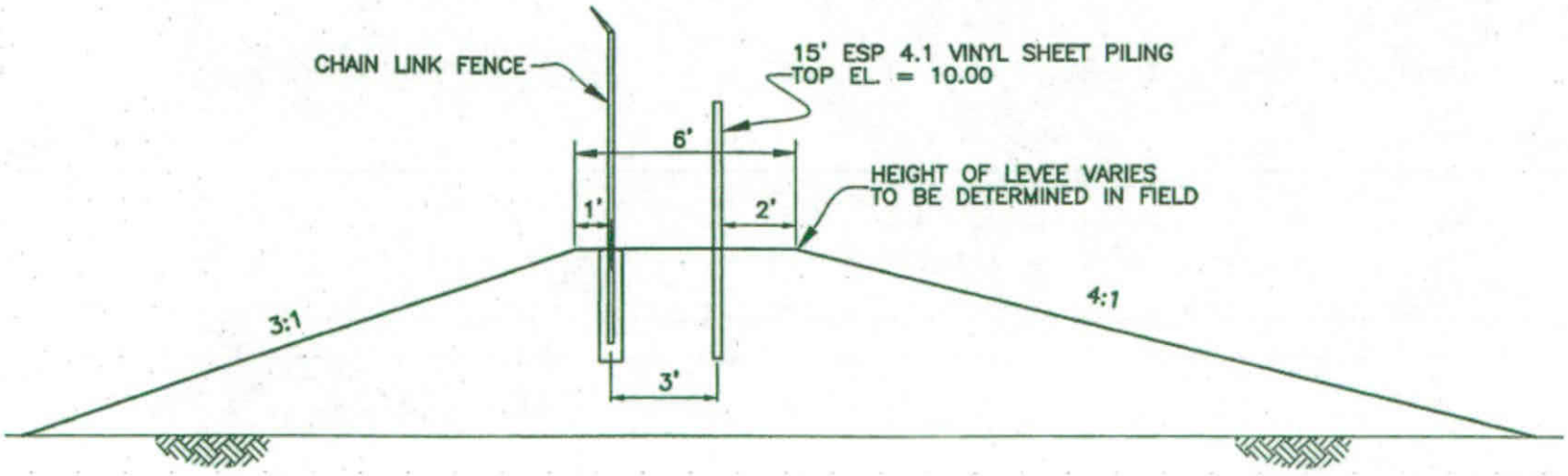
Section Views of the Proposed Earthen Berm/Concrete Floodwall